Docusign Envelope ID: 4D842156-4DE1-42B5-9B38-6E8DF5F59C62

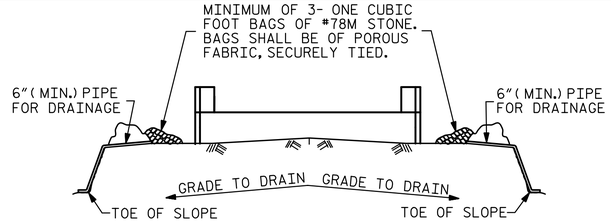

BAGGED STONE AND PIPE SHALL BE PLACED IMMEDIATELY AFTER COMPLETION OF END BENT EXCAVATION. PIPE MAY BE EITHER CONCRETE, CORRUGATED STEEL, CORRUGATED ALUMINUM ALLOY, OR CORRUGATED PLASTIC. PERFORATED PIPE WILL NOT BE ALLOWED.

BAGGED STONE SHALL REMAIN IN PLACE UNTIL THE ENGINEER DIRECTS THAT IT BE REMOVED. THE CONTRACTOR SHALL REMOVE AND DISPOSE OF SILT ACCUMULATIONS AT BAGGED STONE WHEN SO DIRECTED BY THE ENGINEER. BAGS SHALL BE REMOVED AND REPLACED WHENEVER THE ENGINEER DETERMINES THAT THEY HAVE DETERIORATED AND LOST THEIR EFFECTIVENESS.

NO SEPARATE PAYMENT WILL BE MADE FOR THIS WORK AND THE ENTIRE COST OF THIS WORK SHALL BE INCLUDED IN THE UNIT CONTRACT PRICE BID FOR THE SEVERAL PAY ITEMS.

TEMPORARY DRAINAGE AT END BENT

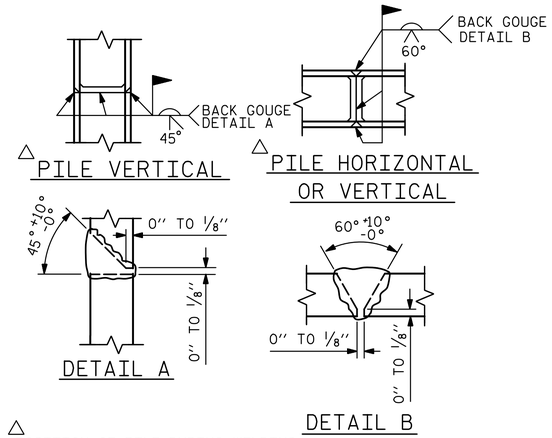

△ POSITION OF PILE DURING WELDING.

PILE SPLICE DETAILS

BAR TYPES

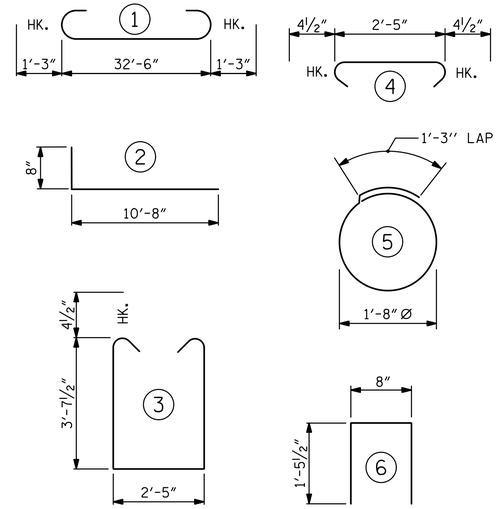

ALL BAR DIMENSIONS ARE OUT TO OUT.

BILL OF MATERIAL

END BENT 2

BAR	NO.	SIZE	TYPE	LENGTH	WEIGHT
B1	8	#9	1	35'-0"	952
B2	28	#4	STR	17'-7"	329
B3	9	#4	STR	2'-5"	15
D1	18	#8	STR	2'-3"	108
H1	48	#5	2	11'-4"	567
K1	12	#4	STR	2'-11"	23
K2	12	#4	STR	17'-7"	140
S1	42	#4	3	10'-5"	292
S2	42	#4	4	3'-2"	89
S3	20	#4	5	6'-6"	87
U1	27	#4	6	3'-7"	65
V1	60	#4	STR	7'-2"	287
V2	54	#4	STR	5'-3"	189

REINFORCING STEEL (FOR ONE END BENT) 3,143 LBS.

CLASS A CONCRETE BREAKDOWN (FOR ONE END BENT)

POUR #1 CAP, LOWER PART OF WINGS & COLLARS 17.3 C.Y.

POUR #2 BACKWALL & UPPER PART OF WINGS 5.0 C.Y.

TOTAL CLASS A CONCRETE 22.3 C.Y.

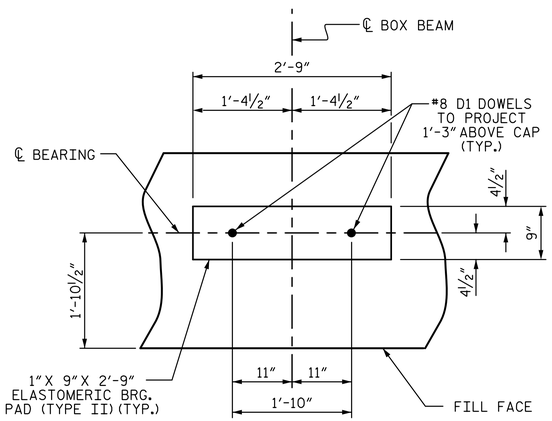

DETAIL "A"

(END BENT 2 SHOWN)

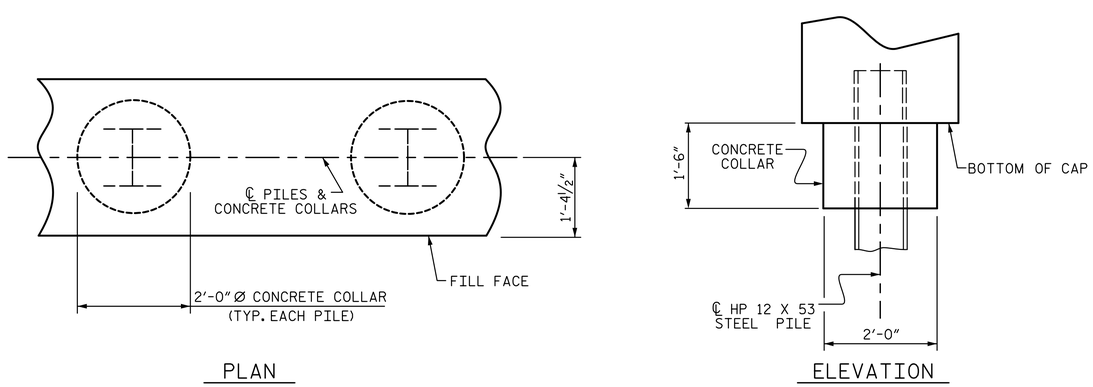

PLAN

ELEVATION

CORROSION PROTECTION FOR STEEL PILES DETAIL

(END BENT 2 SHOWN)

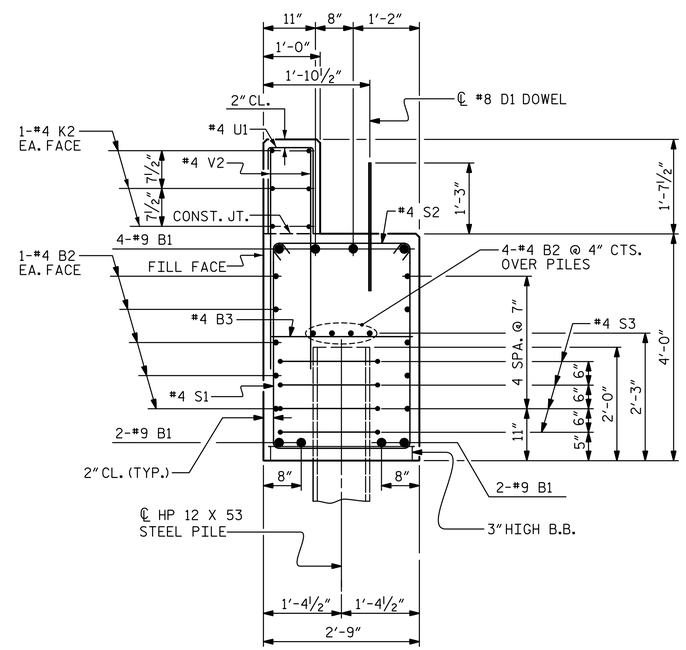

SECTION A-A

(CONCRETE COLLAR NOT SHOWN FOR CLARITY. SEE "CORROSION PROTECTION FOR STEEL PILES DETAIL.")

PROJECT NO. DF18314.2075090

POLK COUNTY

STATION: 12+15.00 -L-

SHEET 3 OF 3

NORTH CAROLINA PROFESSIONAL SEAL ENGINEER TONY R. LAWS 040337

10/7/2025

RS&H

RS&H Architects-Engineers-Planners, Inc.
8521 Six Forks Road, Suite 400
Raleigh, NC 27615
919-926-4100 FAX 919-846-9080
www.rsandh.com
North Carolina License Nos. 50073 * F-0493 * C-28

STATE OF NORTH CAROLINA
DEPARTMENT OF TRANSPORTATION
RALEIGH

SUBSTRUCTURE

END BENT 2 DETAILS

REVISIONS						SHEET NO.
NO.	BY:	DATE:	NO.	BY:	DATE:	S-22
1			3			TOTAL SHEETS
2			4			24

DOCUMENT NOT CONSIDERED FINAL UNLESS ALL SIGNATURES COMPLETED

DRAWN BY :	J. SCACCA	DATE :	05/2025
CHECKED BY :	M. ACOSTA	DATE :	07/2025
DESIGN ENGINEER OF RECORD:	T. R. LAWS	DATE :	10/2025

10/7/2025
\\rsandh.com\files\Projects\NCDOT\10034734006_Polk_112\03.00 Project Execution\03.04 Design\Structures\CAD\401_043_DF18314.2075090_SMU_E2_S-22_740112.dgn
AcostaM